PROJECT: STANDARD PLANS FOR 10'x14' OVAL VINYL GAZEBO

This drawing is the property of Country Lane Woodworking, LLC, provided by Timber Tech Engineering, Inc. and reproduction, alteration or use of this drawing without the written consent of Country Lane Woodworking, LLC is prohibited. Drawings shall not be scaled to obtain dimensions. The contractors and builders involved on this project shall verify all dimensions and conditions before starting work and any discrepancy shall be reported to the engineer in writing before starting work.

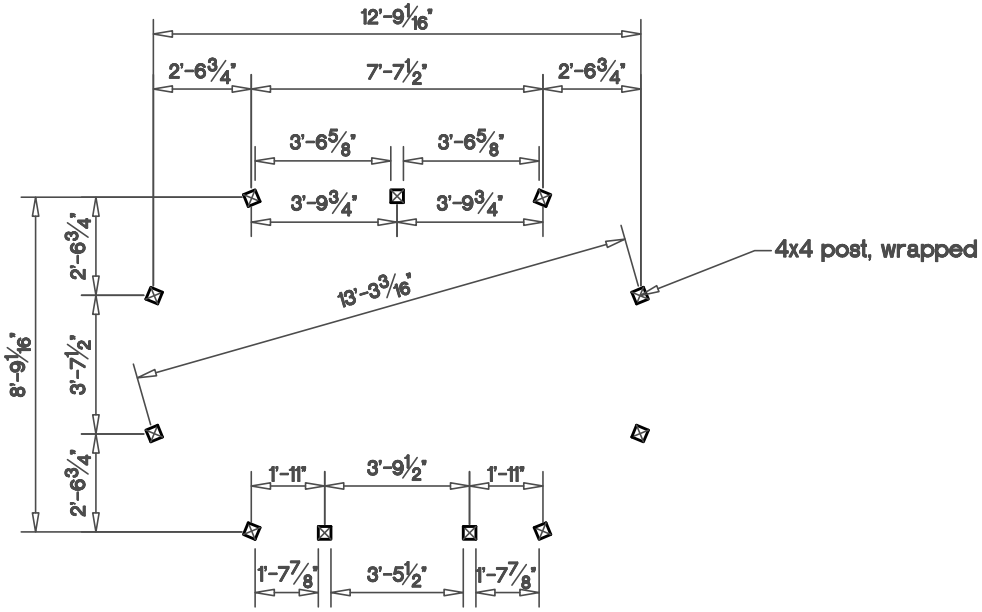

Post Layout Plan

NTS

PROJECT: STANDARD PLANS FOR 10'x14' OVAL VINYL GAZEBO

This drawing is the property of Country Lane Woodworking, LLC, provided by Timber Tech Engineering, Inc. and reproduction, alteration or use of this drawing without the written consent of Country Lane Woodworking, LLC is prohibited. Drawings shall not be scaled to obtain dimensions. The contractors and builders involved on this project shall verify all dimensions and conditions before starting work and any discrepancy shall be reported to the engineer in writing before starting work.

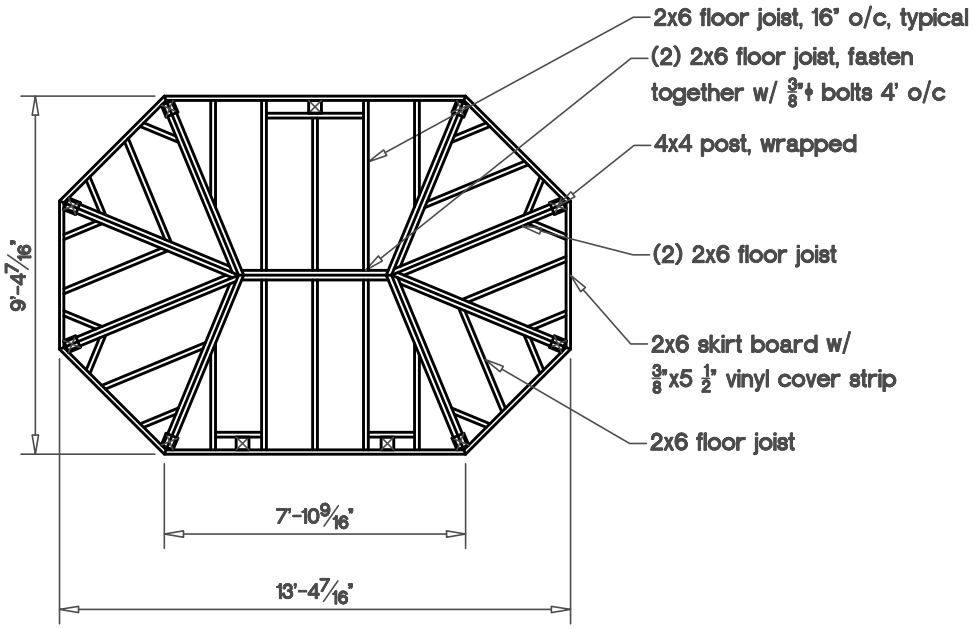

Floor Framing Plan

NTS

Kit Unit

PROJECT: STANDARD PLANS FOR 10'x14' OVAL VINYL GAZEBO

This drawing is the property of Country Lane Woodworking, LLC, provided by Timber Tech Engineering, Inc. and reproduction, alteration or use of this drawing without the written consent of Country Lane Woodworking, LLC is prohibited. Drawings shall not be scaled to obtain dimensions. The contractors and builders involved on this project shall verify all dimensions and conditions before starting work and any discrepancy shall be reported to the engineer in writing before starting work.

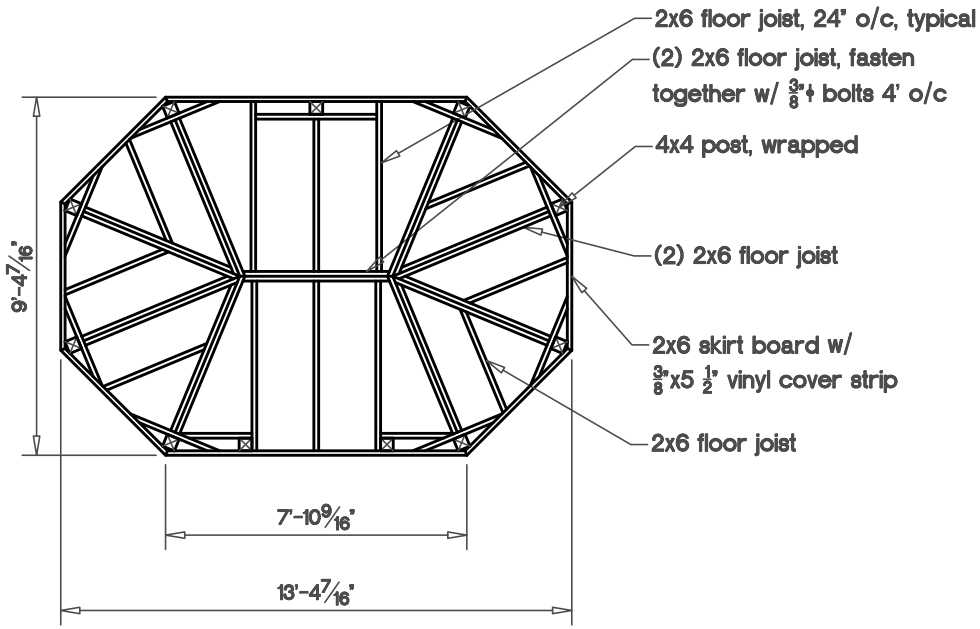

Floor Framing Plan

NTS

Fully Assembled Unit